Superfine
GROUP OF INDUSTRIES
Where Excellence Comes First

WINDOWS SERIES

Manufacturers of
Aluminium Extruded
Sections & Profiles

INDEX

ARCHITECTURAL PROFILES					
DRAWING NO.	PAGE NO.	DRAWING NO.	PAGE NO.	DRAWING NO.	PAGE NO.
WINDOWS SERIES		SINTEX A GROOVE		HANDLE WITH OUTER LEG	
1/2" HANDLE		1076	30	EXT-1007	34
1049	28	1077	30	INTERLOCK WITHOUT GROOVE	
1050	28	1078	30	EXT-1008	34
1/2" TOP BOTTOM		1079	30	20mm BEARING TOP BOTTOM	
1036	28	1080	30	EXT-1009	34
1/2" INTERLOCK		SINTEX U		1"x3" BEARING TOP BOTTOM	
1051	28	1081	30	EXT-3148	34
1/2" BEARING TOP BOTTOM		3/4" MATTING		1"x3" HANDLE	
1052	28	1082	30	EXT-3149	34
3/4" HANDLE		1" MATTING		4"x2" LOWER	
1053	28	1083	30	EXT-3413	34
1054	28	HANDLE WITH OUTER LEG			
1055	28	1084	31		
1056	28	HANDLE WITH INNER LEG			
1057	28	1085	31		
3/4" TOP BOTTOM		INTERLOCK WITHOUT GROOVE			
1058	28	1086	31		
1059	28	INTERLOCK WITH INNER LEG			
1060	28	1087	31		
1061	28	3/4" TAPER HANDLE			
1062	28	1088	31		
3/4" INTERLOCK		3/4" TAPER BEARING BOTTOM			
1063	28	1089	31		
1064	28	3/4" TAPER INTERLOCK			
1065	28	1090	32		
1066	28	1" HANDLE 43mm			
3/4" BEARING TOP BOTTOM		1091	32		
1067	29	1092	32		
1068	29	1" HANDLE 50mm			
1069	29	1093	32		
1070	29	1094	32		
3/4" HANDLE WITHOUT GROOVE		1" INTERLOCK			
1071	29	1095	32		
3/4" INTERLOCK WITHOUT GROOVE		1096	32		
1072	29	1" BEARING TOP BOTTOM			
18 X 60 HANDLE		1097	32		
1197	29	3" X 1" HANDLE			
18 X 60 INTERLOCK WITH LEG		1098	32		
1198	29	INTERLOCK 18 X 50 WITHOUT LEG			
18 X 60 INTERLOCK WITHOUT LEG		1048	33		
1193	29	1" X 3" MATING			
18 X 60 BEARING TOP BOTT.		1099	33		
1199	29	INTERLOCK 18 X 50 WITH LEG			
SINTEX WINDOWS SERIES		1100	33		
SINTEX H WITHOUT GROOVE		HANDLE 18 X 50			
1073	30	1101	33		
SINTEX A WITHOUT GROOVE		SOLID BEARING BOTTOM			
1074	30	1102	33		
SINTEX H GROOVE		AJEX HANDLE			
1075	30	1103	33		
		1104	33		

WINDOWS SERIES

1/2" HANDLE

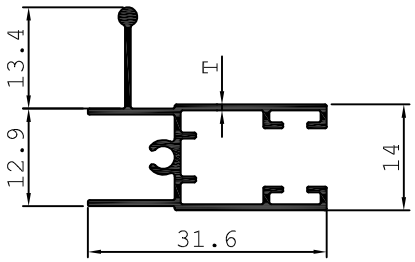

Sr. No.	Section No.	T	Wt. / Mtr In Kgs	Wt. Range Gms / 12'
1	1049	0.65	0.245	900 - 1000
2	1050	1.00	0.328	1200 - 1300

1/2" TOP BOTTOM

1036 0.219 Kg/M

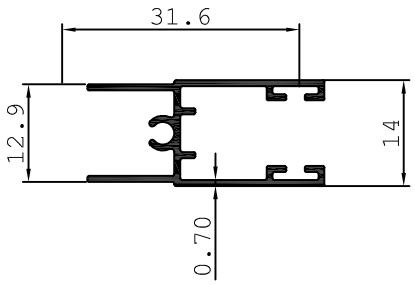

1/2" INTERLOCK

1051 0.245 Kg/M

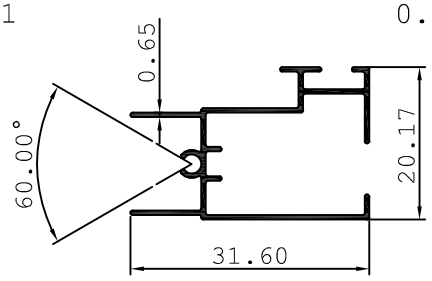

1/2" BEARING TOP BOTTOM

1052 0.218 Kg/M

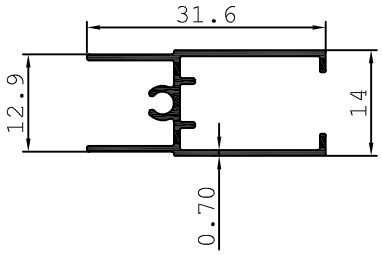

3/4" HANDLE

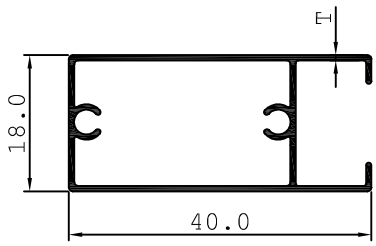

Sr. No.	Section No.	T	Wt. / Mtr In Kgs	Wt. Range Gms / 12'
1	1053	0.80	0.327	1200 - 1400
2	1054	0.91	0.382	1400 - 1600
3	1055	1.05	0.437	1600 - 1800
4	1056	1.17	0.491	1800 - 2000
5	1057	1.30	0.546	2000 - 2200

3/4" TOP BOTTOM

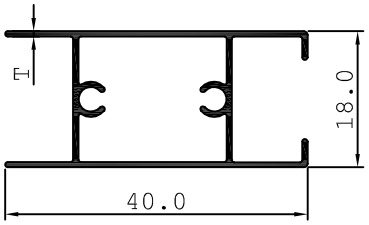

Sr. No.	Section No.	T	Wt. / Mtr In Kgs	Wt. Range Gms / 12'
1	1058	0.80	0.327	1200 - 1400
2	1059	0.91	0.382	1400 - 1600
3	1060	1.05	0.437	1600 - 1800
4	1061	1.17	0.491	1800 - 2000
5	1062	1.30	0.546	2000 - 2200

3/4" INTERLOCK

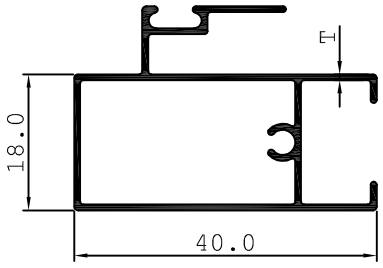

Sr. No.	Section No.	T	Wt. / Mtr In Kgs	Wt. Range Gms / 12'
1	1063	0.85	0.382	1300 - 1500
2	1064	0.90	0.424	1500 - 1700
3	1065	1.20	0.520	1800 - 2000
4	1066	1.30	0.537	2000 - 2200

Figure not to Scale • All Dimensions in mm

WINDOWS SERIES

3/4" BEARING TOP BOTTOM

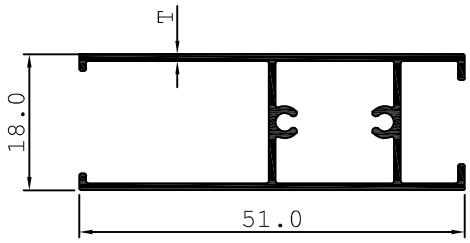

Sr. No.	Section No.	T	Wt. / Mtr In Kgs	Wt. Range Gms / 12'
1	1067	0.80	0.368	1350 - 1500
2	1068	0.90	0.409	1500 - 1700
3	1069	1.20	0.520	1800 - 2000
4	1070	1.30	0.573	2000 - 2200

3/4" HANDLE WITHOUT 'G'

1071 0.260 Kg/M

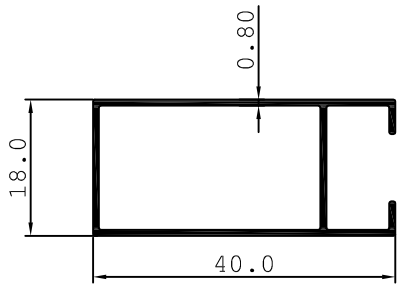

3/4" INTERLOCK WITHOUT 'G'

1072 0.348 Kg/M

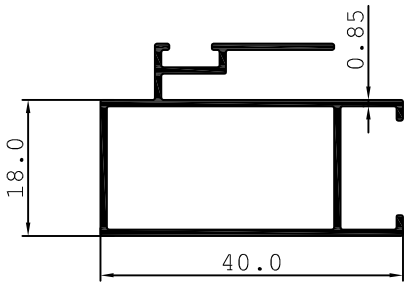

HANDLE 18 X 60

1197 0.521 Kg/M

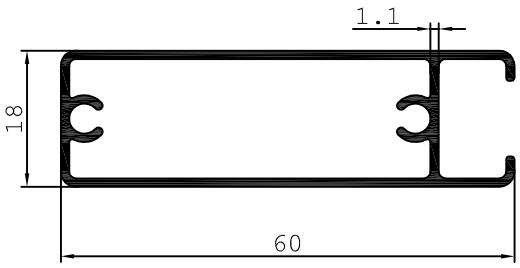

18 X 60 INTERLOCK WITH LEG

1198 0.645 Kg/M

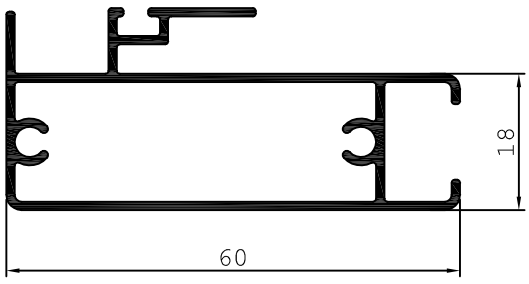

18 X 60 INTERLOCK WITHOUT LEG

1193 0.618 Kg/M

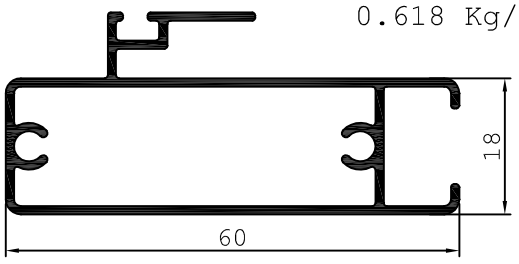

BEARING TOP BOTTOM 18 X 60

1199 0.646 Kg/M

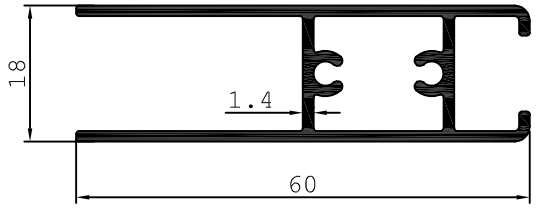

SINTEX WINDOWS SERIES

SINTEX H WITHOUT GROOVE

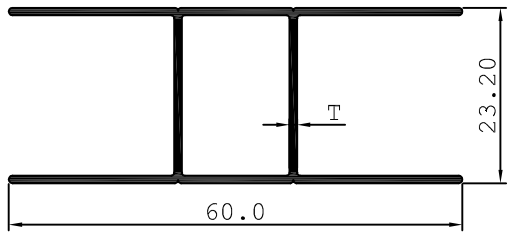

Sr. No.	Section No.	T	Wt. / Mtr In Kgs	Wt. Range Gms / 12'
1	1073	1.00	0.437	1550 - 1750

SINTEX H GROOVE

1075 0.469 Kg/M

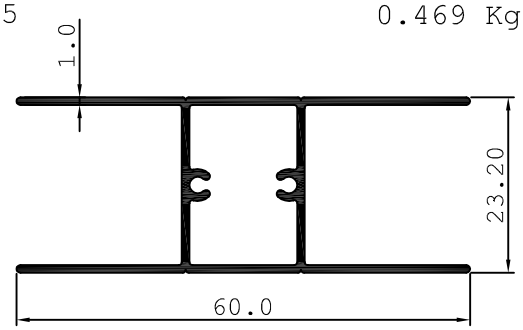

SINTEX U

1081 0.162 Kg/M

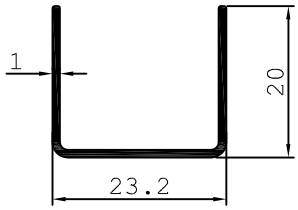

3/4" MATING

1082 0.500 Kg/M

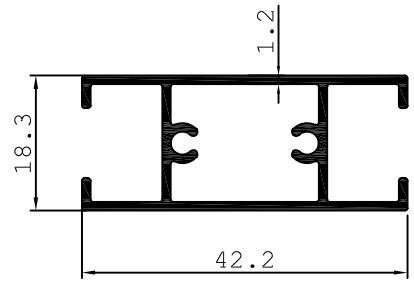

SINTEX A WITHOUT GROOVE

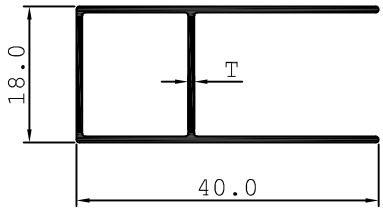

Sr. No.	Section No.	T	Wt. / Mtr In Kgs	Wt. Range Gms / 12'
1	1074	0.80	0.243	850 - 1050

SINTEX A GROOVE

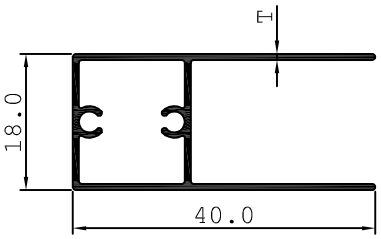

Sr. No.	Section No.	T	Wt. / Mtr In Kgs	Wt. Range Gms / 12'
1	1076	0.70	0.218	750 - 850
2	1077	0.80	0.245	850 - 950
3	1078	0.90	0.286	950 - 1100
4	1079	1.00	0.327	1100 - 1300
5	1080	1.20	0.409	1400 - 1600

1" MATING

1083 0.650 Kg/M

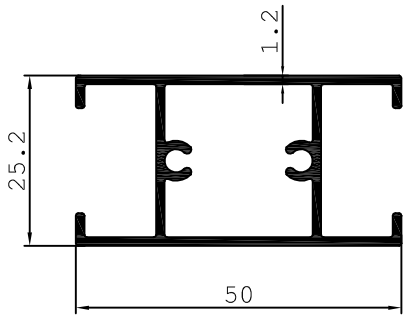

Figure not to Scale • All Dimensions in mm

WINDOWS SERIES

HANDLE WITH OUTER LEG

1084 0.391 Kg/M

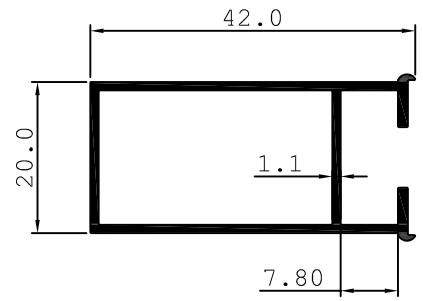

HANDLE WITH INNER LEG

1085 0.494 Kg/M

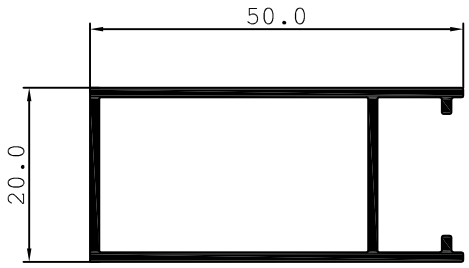

INTERLOCK WITHOUT GROOVE

1086 0.529 Kg/M

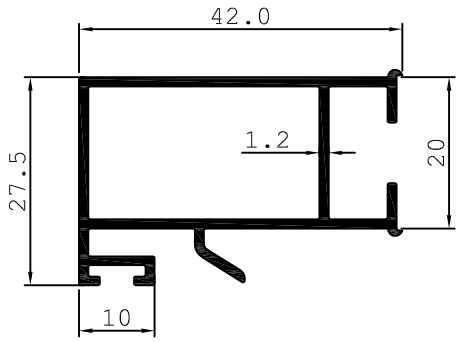

INTERLOCK WITH INNER LEG

1087 0.565 Kg/M

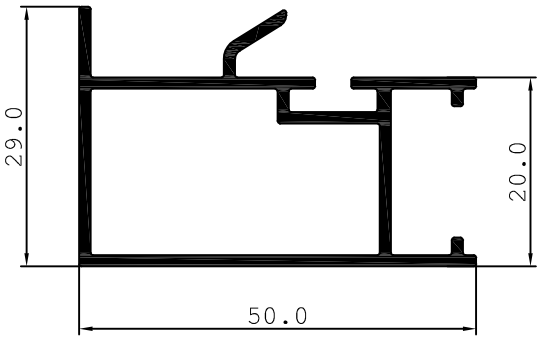

3/4" TAPER HANDLE

1088 0.471 Kg/M

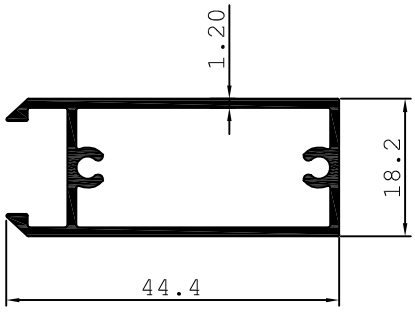

3/4" TAPER BEARING BOTTOM

1089 0.523 Kg/M

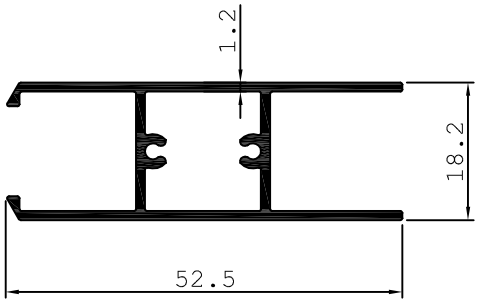

WINDOWS SERIES

3/4" TAPER INTERLOCK

1090 0.607 Kg/M

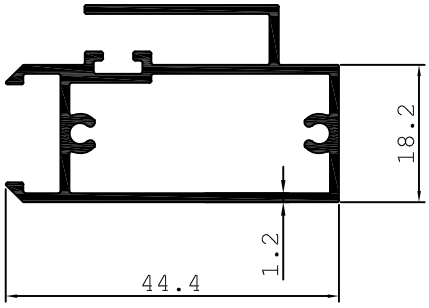

1" HANDLE 43MM

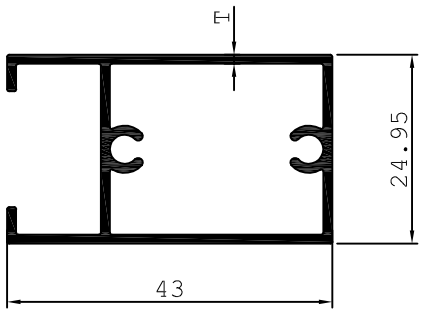

Sr. No.	Section No.	T	Wt. / Mtr In Kgs	Wt. Range Gms / 12'
1	1091	0.95	0.512	1850 - 2050
2	1092	1.10	0.574	2100 - 2300

1" HANDLE 50MM

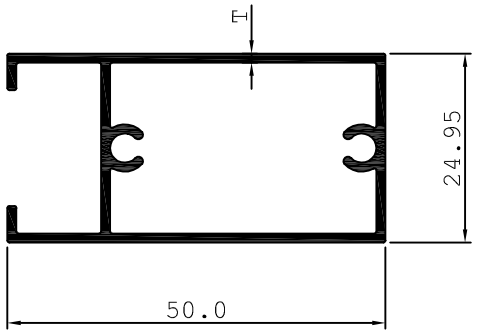

Sr. No.	Section No.	T	Wt. / Mtr In Kgs	Wt. Range Gms / 12'
1	1093	1.10	0.519	1800 - 2000
2	1094	1.28	0.574	2100 - 2300

1" INTERLOCK

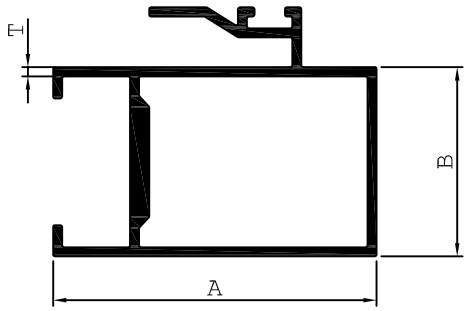

Sr. No.	Section No.	A	B	T	Wt. / Mtr In Kgs	Wt. Range Gms / 12'
1	1095	50.0	25.0	1.15	0.562	2060 - 2260
2	1096	42.8	25.0	1.19	0.601	2100 - 2300

1" BEARING TOP BOTTOM

1097 0.634 Kg/M

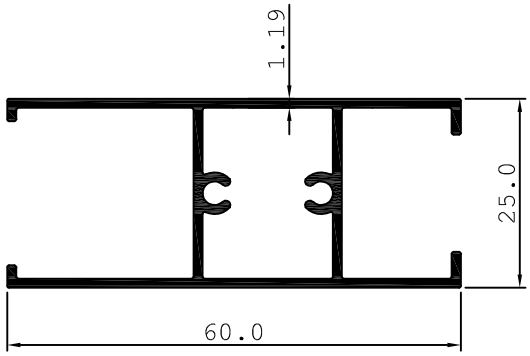

3" X 1" HANDLE

1098 0.918 Kg/M

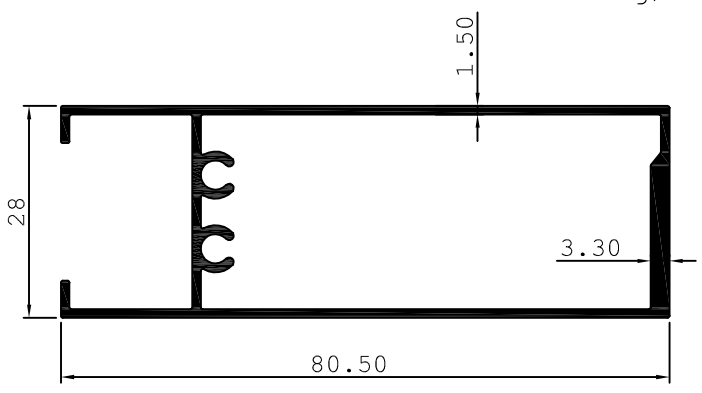

Figure not to Scale • All Dimensions in mm

WINDOWS SERIES

INTERLOCK 18 X 50 WITHOUT LEG

1048 0.556 Kg/M

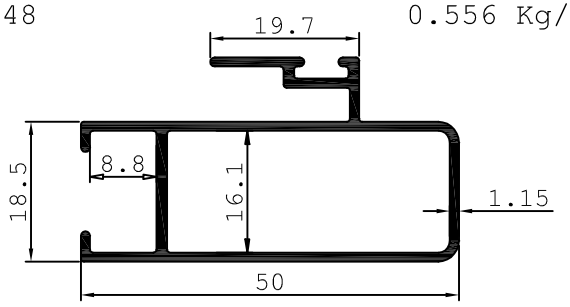

1" X 3" MATTING

1099 0.628 Kg/M

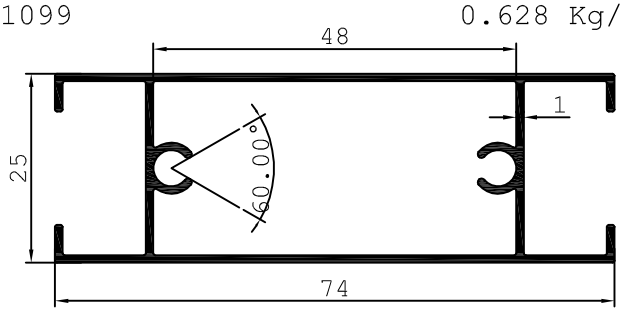

INTERLOCK 18 X 50 WITH LEG

1100 0.584 Kg/M

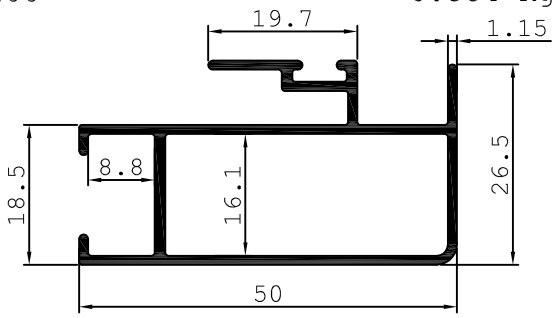

HANDLE 18 X 50

1101 0.471 Kg/M

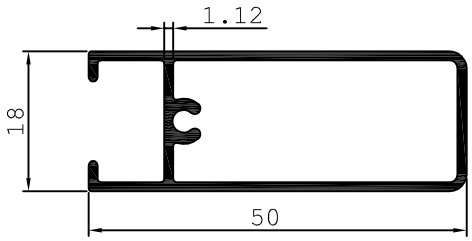

SOLID BEARING BOT.

1102 0.390 Kg/M

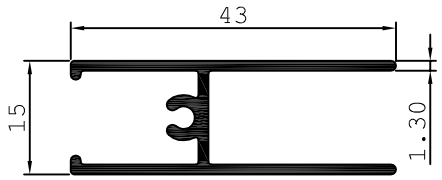

AJEX SECTION

AJEX HANDLE

1103 0.910 Kg/M

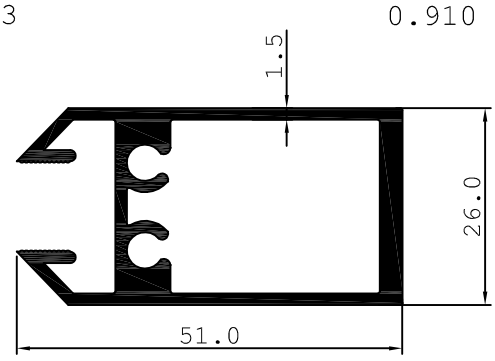

AJEX TOP BOTTOM

1104 0.930 Kg/M

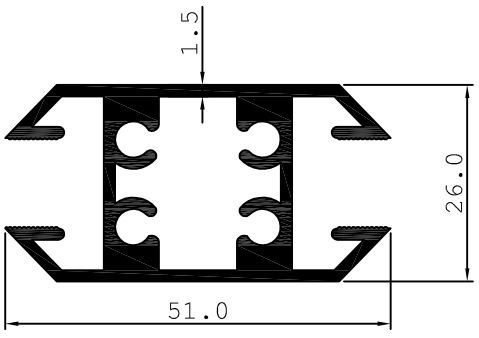

WINDOWS SERIES

HANDLE WITH OUTER LEG

EXT-1007 0.424 Kg/M

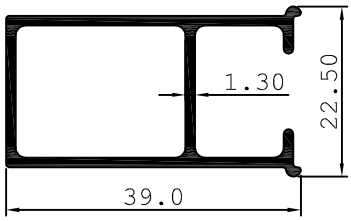

INTERLOCK WITHOUT GROOVE

EXT-1008 0.471 Kg/M

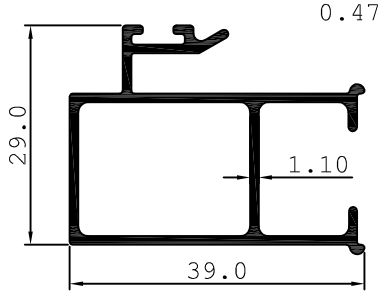

20mm BEARING TOP BOTTOM

EXT-1009 0.362 Kg/M

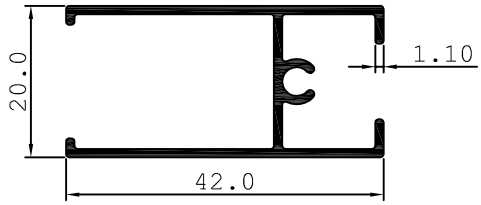

1"x3" BEARING TOP BOTTOM

EXT-3148 0.852 Kg/M

1"x3" HANDLE

EXT-3149 0.798 Kg/M

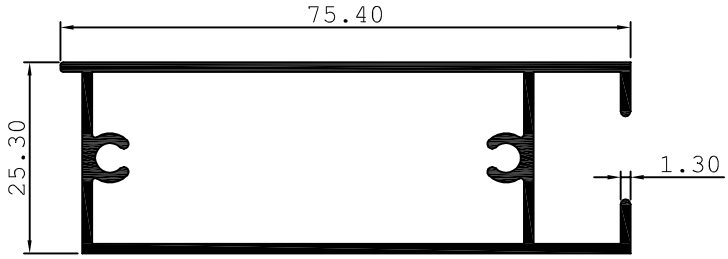

4"x2" LOWER

EXT-3413 0.528 Kg/M

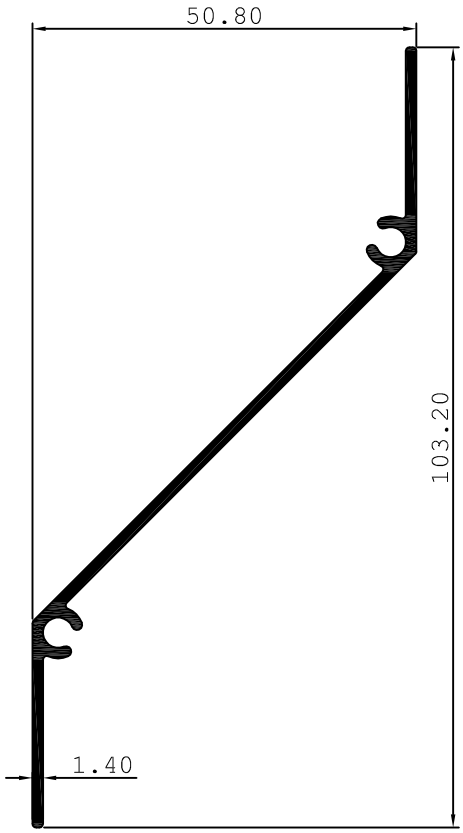

Figure not to Scale • All Dimensions in mm

Superfine
GROUP OF INDUSTRIES

Where Excellence Comes First

Regd. Office: "Pratibha" 1267, Dalmandai,
Ahmednagar 414001. Maharashtra - INDIA
Tel.: +91-241-2327220, 2327219, 2324389,
2347965, 2323602. Fax.: +91-241-2346536
Email: info@superfineindia.com

Superfine Metals Pvt. Ltd.

Factory: Plot No E 29 / E 39, Supa M.I.D.C.,
Tal. - Parner, Dist. - Ahmednagar.

Superfine Extrusions Pvt. Ltd.

Factory: Gat No 53 B, 17th Km. Stone, Nagar-Kalyan Road,
Vill-Bhalwani, Tal. - Parner, Dist. - Ahmednagar.

Superfine Profiles & Extrusions Pvt. Ltd.

Factory: Gat No 58/1, 17th Km. Stone, Nagar-Kalyan Road,
Vill-Bhalwani, Tal. - Parner, Dist. - Ahmednagar.

9604858250

www.superfineindia.com

Ushering a Revolution in Aluminium Extrusions and Safeguarding Environment